NOTES: (UNLESS OTHERWISE SPECIFIED)

ALL DIMENSIONS ARE IN MILLIMETERS.

LINEAR SPECIFICATION:

LINEAR STROKE: 10 +1.0/−0 mm
FORCE CONSTANT: 5.5 N/AMP
PEAK FORCE: 8.0 N @ 1.8 AMPS (24 VDC)
CONTINUOUS FORCE 5.5 N @ 1.0 AMPS (24 VDC)
COIL DC RESISTANCE: 12.5 OHMS @ 22°C
COIL INDUCTANCE: 1.84 mH @ 1 kHz
ENCODER RESOLUTION: .5, 1, 5 MICROMETERS
ENCODER ACCURACY: ±4 COUNTS

MOVING MASS: 70 GRAMS
TOTAL MASS: 300 GRAMS
OPERATING TEMPERATURE: −10°C TO +65°C

SIGNATURE NEEDED FOR ORDER APPROVAL
SIGN _____ DATE _____
APPROVAL NOT RECEIVED WITHIN
48 HOURS MAY AFFECT DELIVERY

REVISIONS

REV	DATE	ECN	DESCRIPTION	APP
G	3/3/04	3084	SEE ECN	CAW
H	1/26/05	3470	SEE ECN	JN

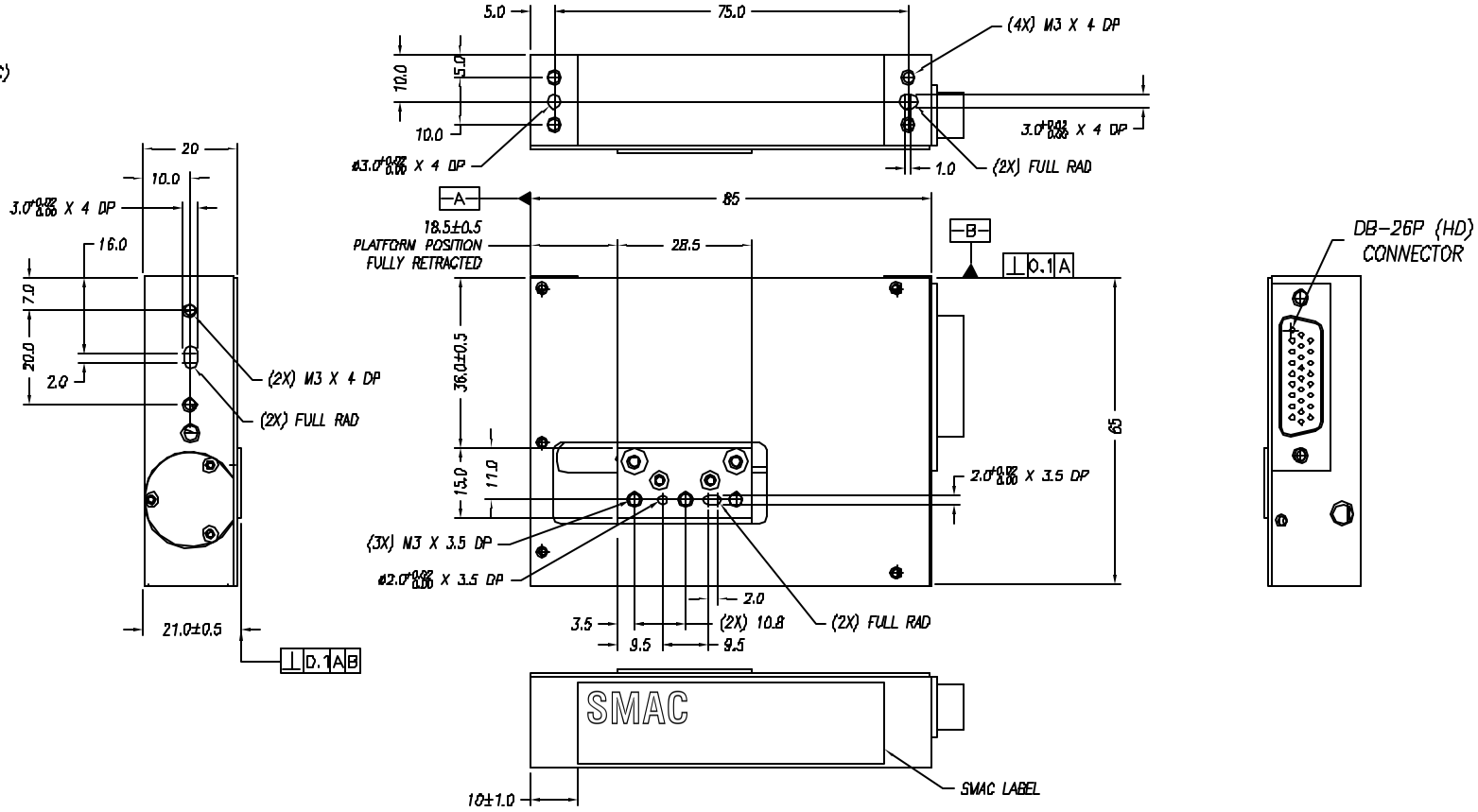

DB-26P PINOUT

1	(L) PH. A+
2	(L) PH. B+
3	(L) PH. Z+
4	NC
5	NC
6	I/O RTN
7	NC
8	NC
9	NC
10	(L) PH. A−
11	(L) PH. B−
12	(L) PH. Z−
13	NC
14	NC
15	LIMIT −
16	NC
17	NC
18	NC
19	+5VDC
20	5V RTN
21	(L) COIL +
22	(L) COIL +
23	(L) COIL −
24	(L) COIL −
25	NC
26	NC

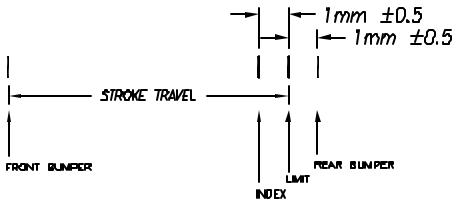

TOLERANCES ARE:
X. ± 0.50
X.X ± 0.1
X.XX ± 0.05
X.XXX ±
ANGULARITY ± 0.1°
CONCENTRIC ± 0.01
ROUNDNESS ± 0.05
EDGE BREAK 0.2 MAX
CHAMFER 0.2 MAX

FILE NAME: LAS20-010-5

MATERIAL: 6061-T6 ALUMINUM
HEAT TREAT: ____/____ RC
____ DEEP
MACHINE FINISH: 1.6 EXCEPT NOTED.
PROTECTIVE FINISH: ELECTROLESS NICKEL
SPEC. NUMBER:

SMAC

REF. NUMBER: LAS20-010

DESIGNED BY: TOAN VU	DATE: 09/09/02	CHECKED BY:	DATE:	CONTRACT: STD
DRAWN BY: S. HOOYMAN	DATE: 07/02/03	APPROVED BY:	DATE:	

PART NAME: LAS20-010-5
SHEET NUMBER: 1 OF 1

SCALE:	DWG SIZE:	PART NUMBER:	REVISION:
NONE (DO NOT SCALE DWG)	B	LAS20-010-5	H